TSUBAKI

EHM40C106010R2

Shock Monitor

Electric power detection type overload protector

Instruction Manual

Model No.:TSM4000C1
TSM4000C1P

Built-in Sequence Type
for Forward/Reverse Rotation Control

⚠ CAUTION

- Please read this instruction manual carefully and understand the contents before starting the installation, connection (wiring), operation, and maintenance/inspection of this product.
- Ensure that this instruction manual is delivered to the end users who will actually use this product.
- Keep this instruction manual safe from loss until this product is discarded.
- This product is subject to change without prior notice.

TSUBAKIMOTO CHAIN CO.

Published on Ocotober 1, 2017

Table of Contents

1. Introduction..... 1
2. Safety Precautions..... 1
3. Usage..... 3
3.1 What is a C1 model?..... 3
3.2 Other functions.....3
3.3 Operation description.... 4
4. Checking the Package Contents.. 6
4.1 Model number meaning (Main unit + Current sensor)6
5. Part Names 6
6. Installation.....7
7. Wiring 7
8. Terminal Functions 9
8.1 Terminal block..... 9
8.2 Connector CN1.....11
9. Connection Diagram.....13
10. Operation..... 14
10.1 LED indicators and operation keys 14
10.2 Switching modes..... 15
10.3 Monitor mode..... 15
10.4 Test mode..... 16
10.5 Program mode..... 16
11. Troubleshooting..... 20
12. Trip Recovery Procedure..... 21
13. Precautions on Maintenance/Inspection 21
14. Periodic Inspection..... 21
15. For Your Safety..... 21
16. Specifications..... 22
17. Outer Dimensions..... 23
18. Warranty..... 24

1. Introduction

Thank you for purchasing the Shock Monitor.
This instruction manual describes from the installation, wiring, operation, through maintenance and inspection of the Shock Monitor. Please read this manual carefully and take due caution while handling the device.

2. Safety Precautions

- Be sure to read this manual and other attached documents carefully before starting the installation, wiring, operation, and maintenance/inspection to ensure proper use.
- Familiarize yourself with all of the knowledge of the devices, safety information, and precautions before using the Shock Monitor.
- After reading this manual, be sure to keep it in a place where users can access any time.
- This instruction uses two levels of safety precautions: WARNING and CAUTION.

⚠ **WARNING**	Failure to follow instructions may lead to dangerous situations where death or severe injury can occur.
⚠ **CAUTION**	Failure to follow instructions may lead to dangerous situation where medium to light injury or property damage can occur.

Even if the instructions are followed, a serious consequence may result depending on the situation.
Be sure to exercise due caution and follow all of these important instructions.

⚠ WARNING

- Use the product described in this instruction manual by observing safety-related laws and regulations such as Ordinance on Industrial Safety and Health.
- Observe the following during the installation, removal, or maintenance/inspection of the product:
  (1) Turn off the power switch.
  (2) Do not go below any equipment which may fall and drop.
  (3) Secure moving parts of the equipment so that they will not move unexpectedly.
  (4) Wear appropriate clothing and protective gear for the work.
- Before starting trial operation or regular inspection, be sure to confirm the operation so that the Shock Monitor properly works as a protection device.
- The Shock Monitor main unit is subject to conditions when it is used for a megger test. Follow the instruction in the instruction manual.
- Do not work while the line is live. Be sure to turn off the power before starting work.
  Otherwise, an electric shock may result.
- The wiring, energization/operation, and maintenance/inspection of the Shock Monitor must be done by an engineer with expert knowledge.
  Otherwise, an electric shock, injury, or fire may result.
- Be sure to ground Terminal E of the Shock Monitor.
  Otherwise, an accident may result.
- When using a 400 VAC motor power supply, ensure that the Shock Monitor unit and 400 V resistor are connected properly.
  Otherwise, an electric shock or fire may result.

⚠ CAUTION

- Ensure that this instruction manual is delivered to the end users.
  Also, let the end users carefully read the manual before using the Shock Monitor to ensure correct use.
- If you do not have the instruction manual, contact your TEM dealer or a TEM sales office and request a copy by specifying the product name, model number, etc.
- Do not disassemble the product or make additional work for modification.
- This product contains **several consumable parts (electrolytic capacitor, relay, etc.)**. Check functions and operation periodically according to the instruction manual. If any malfunction is found, contact your dealer for repair.
- Do not use the Shock Monitor in an atmosphere where any corrosive gas exists. Sulfidizing gases (SO_2, H_2S), in particular, cause corrosion of copper and copper alloy used in the printed circuit boards and components, resulting in breakdowns.
- Do not allow the entry of foreign matter such as lint, paper pieces, woodchips, dust, or metal chips into the Shock Monitor.
- Clean off dirt periodically because it may cause overheating of the product or fire.
- When discarding the product, dispose it as industrial waste.

3. Usage

3.1 What is a C1 model?

The TSM4000C1 is intended for crushers, trash compactors, shredders or screw conveyors driven by a 3-phase induction motor. In addition to accurate monitoring of clogging caused by feeding of foreign materials or of overload applied to the blade, it can stop the main shaft and work as a sequencer to control the forward/reverse rotation switching to release materials stuck between blades. It provides various parameters required for crushers and other equipment, allowing optimum settings according to the actual working conditions. Moreover, parameters such as load detection level or operating time can be changed easily on the LCD display without the need for a loader, making the TSM4000C1 best suited for worksites where frequent setting changes are required.

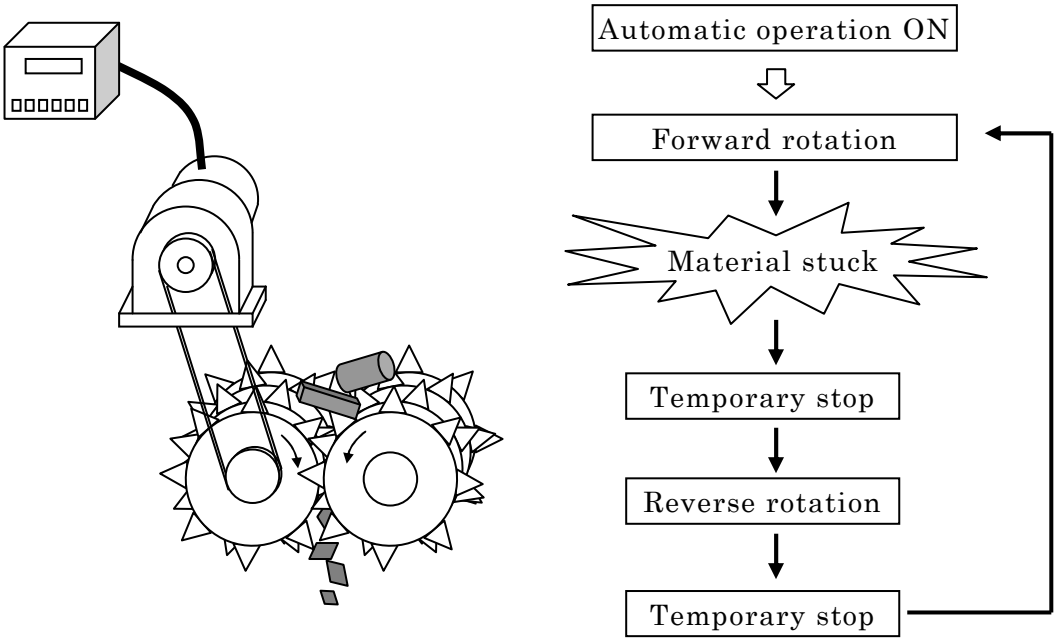

Load detection method

The Shock Monitor captures the voltage and current of the motor used for driving equipment and detects the power consumption of the motor.

Major functions

- By receiving a start command from an external source, the TSM4000C1 outputs a forward rotation signal for the main shaft. If the load reaches or exceeds the overload level during crushing operation, it stops the forward rotation signal and outputs a reverse rotation signal for a specified period. After the reverse rotation finishes, the forward rotation resumes automatically.
- If the overload cannot be cleared after repeated switching of forward/reverse rotation, the operation can be stopped with a count up signal provided after a specified number of switching attempts.
- If idle operation continues for some time, the operation can be stopped automatically to save useless power consumption.

3.2 Other functions

Load condition recording

Detected electric power values can be output as analog voltage signals. (Refer to CN1 in Section 8.2 on page 11.)

Power detection response setting

When the load pulsates frequently due to the resonance or jerking of the equipment, you can delay the response of the power detection. This suppresses the pulsation of the detected value and improves the accuracy of the detection of abnormal load. (Refer to parameter 14 on page 19.)

3.3 Operation description

Automatic operation

If the section between X1 and CM is short-circuited, automatic operation starts. The operation stops when the section is opened. The rotation direction under normal load is forward (Output relay FWD is ON).

In automatic operation, measures against overload are taken automatically, such as stopping and switching to reverse rotation.

・What is overload?

Overload is assumed when the detected power reaches or exceeds the level set for parameter 5: ｶﾌｶﾚﾍﾞﾙ and continues for the time specified for parameter 8: ｶﾌｶｹｲｿﾞｸﾀｲﾑ.

・When overload occurs

①Output relay FWD turns OFF. The operation is halted for the time set for parameter 9: ｷｭｳｼﾀｲﾑ (1) (Non-operating period for switching from forward to reverse rotation).

②Next, output relay REV turns ON to start reverse rotation operation. The period of the reverse rotation is the time set for parameter 10: ｷﾞｬｸﾃﾝﾀｲﾑ.

③Then, the operation is halted for the time set for parameter 11: ｷｭｳｼﾀｲﾑ (2) (Non-operating period for switching from reverse to forward rotation), and then forward rotation resumes.

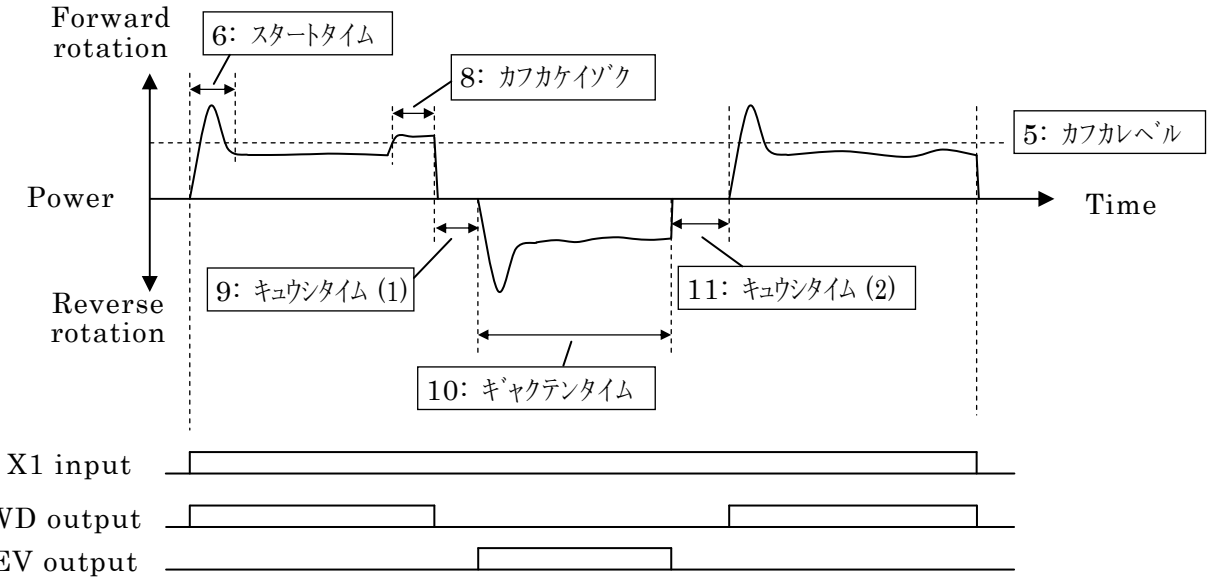

・When overload occurs during the reverse rotation operation

When overload occurs during the reverse rotation operation, the reverse rotation stops regardless of the setting of parameter 10: (ｷﾞｬｸﾃﾝﾀｲﾑ), and the forward rotation resumes after the period of parameter 11: (ｷｭｳｼﾀｲﾑ2) elapses.

・If overload occurs frequently

If overload occurs continuously, it is considered that crushing is impossible.

When the reverse rotation caused by overload is repeated for the number of times specified with parameter 12: (ｷﾞｬｸﾃﾝｶｲｽｳ) within a specified period, output relays STOP and COUNT UP are activated. Set the system to stop the equipment when the STOP signal is issued, and to display "Uncrushable" or another message when the COUNT UP signal is issued (Refer to the connection diagram.).

This specified period is called reverse rotation count time and refers to the period of time determined with the expression below. It is automatically calculated during the setting of parameter 13: ｷﾞｬｸﾃﾝｶｳﾝﾄﾀｲﾑ and displayed at the lower left of the LCD display.

13: ｷﾞｬｸﾃﾝｶｳﾝﾄﾀｲﾑ
2m40s　ﾌﾟﾗｽ 10s

Reverse rotation count time: 2 minutes and 40 seconds

Reverse rotation count time = (6: ｽﾀｰﾄﾀｲﾑ + 9: ｷｭｳｼﾀｲﾑ (1) + 10: ｷﾞｬｸﾃﾝﾀｲﾑ + 11: ｷｭｳｼﾀｲﾑ (2) + Plus setting time for 13: ｷﾞｬｸﾃﾝｶｳﾝﾄﾀｲﾑ) x (12: ｷﾞｬｸﾃﾝｶｲｽｳ − 1)

Example when 12: ｷﾞｬｸﾃﾝｶｲｽｳ is set to 5

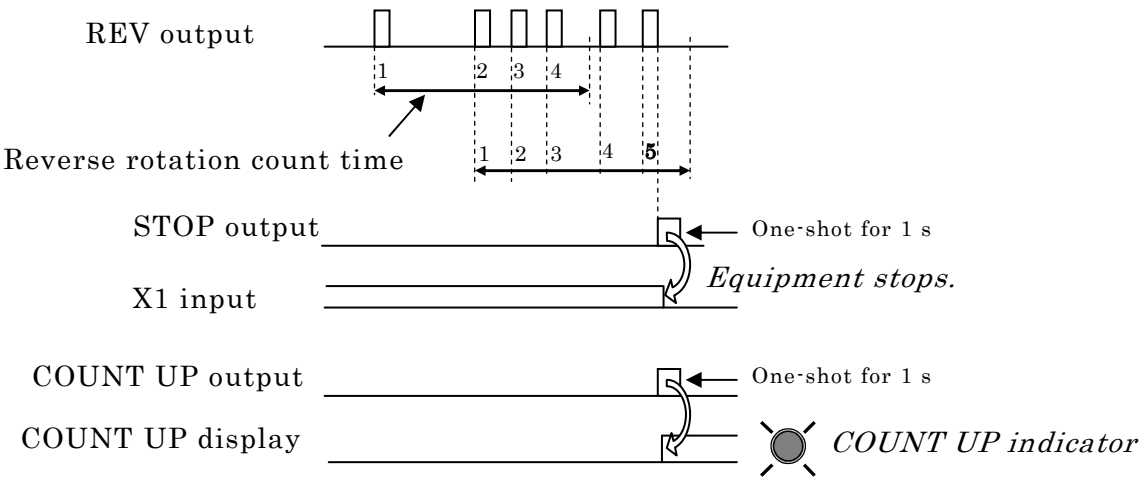

If the reverse rotation is repeated 5 times within the reverse rotation count time, the STOP and COUNT UP outputs turn ON for just one second after the fifth reverse rotation operation finishes.
Refer to the connection diagram on page 13 and connect wiring so that operation signal X1 turns OFF when the STOP output turns ON. The COUNT UP output is intended to set a COUNT UP ("Uncrushable") display on an external device. To set the display, provide a Self-Hold circuit on the external device. Ensure that no operation signal is input until the Self-Hold status is reset.

・When idle operation continues

When idle operation continues for some time, output relay STOP is activated. Use this signal to stop the operation signal and prevent useless power consumption.

Idle operation is assumed when the detected power is less than the level set to parameter 4: ﾑﾌｶﾚﾍﾞﾙ and continues for the period specified with parameter 7: ﾑﾌｶｹｲｿﾞｸﾀｲﾑ or longer.

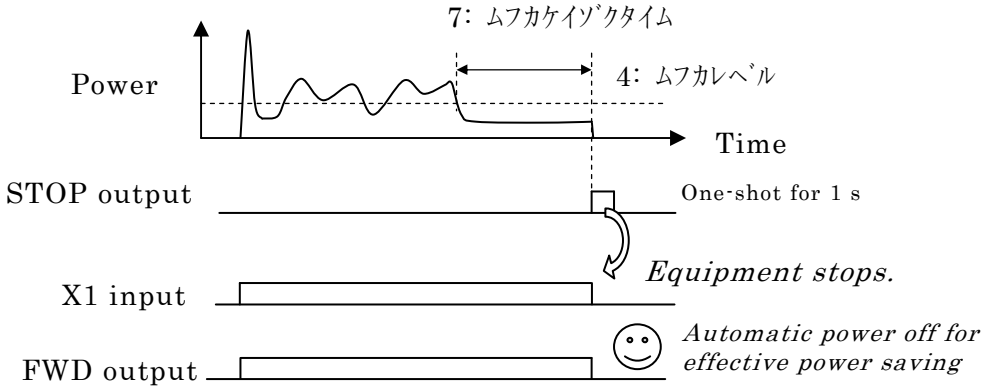

Manual reverse rotation operation

When the section between X2 and CM is short-circuited, the reverse rotation operation is started manually (Output relay REV turns ON.). The operation stops when the section is opened.
During the manual reverse rotation operation, the operation is forced to continue even when overload occurs, as long as the section between X2 and CM is short-circuited.
The operation stops when the sections between X1 and CM and X2 and CM are short-circuited simultaneously.

4. Checking the Package Contents

Check the following about the product you purchased.

(1) Do the model number and specifications on the name plate match your order?

(2) Were there any damages suffered during transportation?

(3) Are the following contents included? (For their appearances, refer to the outer dimensions on page 23.)

Shock Monitor unit (including a socket): TSM4000C1

Current sensor: TSM-U*** or TSM-M***

Sensor cable: TSM4-S01

4.1 Model number meaning (Main unit + Current sensor)

- The model number of the combination of the main unit and current sensor consists of the model numbers of the main unit and sensor as follows:

TSM4000C1 - U010

Model No. of the main unit — Model No. of the current sensor (Last 4 digits of TSM-U010)

- The model number of the sensor cable indicates the cable length as follows:
TSM-S01N ..."01" means 1 m cable
The TSM4-S01N sensor cable is included as an accessory. If this cable length is insufficient, optional cables of 3 m, 5 m, 10 m, 20 m and 30 m are available. Contact TEM when necessary.

5. Part Names

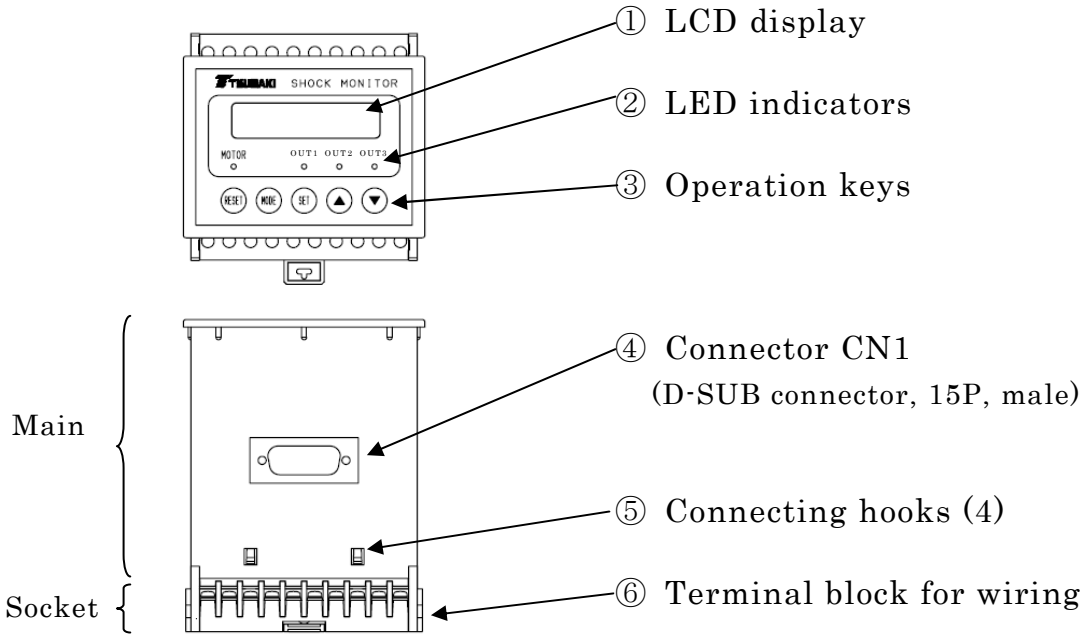

① LCD display ...Shows load ratio, setting values and parameter settings.

② LED indicators ...Indicates that the motor is running and that the output relay is activated.

③ Operation keys ...Keys used for switching the displayed mode or for changing parameters.

④ Connector CN1 ...Connector for using signals such as control input or analog output.

⑤ Connecting hooks ...Used to connect/disconnect the main unit to/from the socket.
For connection, fully insert the main unit until the hooks lock securely.
For disconnection, press down the four hooks simultaneously and remove the main unit from the socket.

⑥ Terminal block for wiring...Terminals for connecting an operational power supply, motor voltage, relay output, current sensor cable, etc.

6. Installation

6.1 Installation environment

Install the Shock Monitor in a place where the following conditions are satisfied:

- Location where the ambient temperature is between 0 to 50°C and the Shock Monitor is not exposed to direct sunlight
- Location where the relative humidity is between 45 to 85%, no condensation or freezing occurs, and no water splashes onto the Shock Monitor
- Location where no dust, corrosive gases, or oil mist exist
- Location where the altitude is 1000 m or less and vibration is 4.9 m/s² or less

6.2 Mounting orientation and space

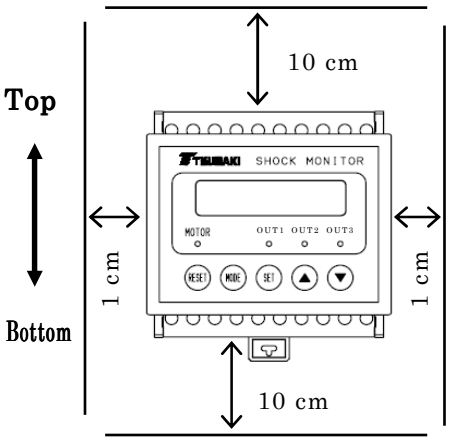

- Mounting method

  Insert M4 screws into the DIN rail or the mounting holes of the socket and attach the main unit. Mount the Shock Monitor so that its panel is oriented vertical to the ground. Mounting it upside down or horizontally may cause overheating and breakdown.

- Space

  To ensure the dissipation of the heat generated from the Shock Monitor, provide spaces as shown in the figure on the left from other equipment, walls, and wiring ducts.

- Panel mounting type (TSM4000C1P)

  Mount the Shock Monitor as shown in the figure on the right.

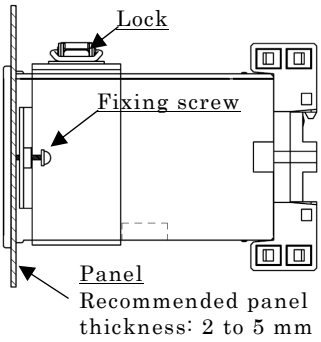

Tighten the fixing screw with the tightening torque of 0.12 to 0.16 N・m. Provide a space of 50 mm or more above the main unit housing to allow access to the lock.

⚠ CAUTION	■ Do not allow the entry of foreign matter such as lint, paper pieces, woodchips, dust, or metal chips into the Shock Monitor. **Otherwise, a fire or accident may result.**

7. Wiring

① Complete wiring by using only the socket before attaching the Shock Monitor main unit to the socket.

② Connect a commercial power supply of 90 to 250 VAC, 50/60Hz or a DC power supply of 90 to 250 VDC (no polarity) to the POWER terminals (11 and 12). Do not connect the output from an inverter or a servo driver. An erroneous connection as such may cause breakdown.

③ Use a ring type crimp terminal shown on the right to connect the power supply cable and the terminal block for wiring.
Limit the tightening torque to 0.5 to 0.6 N・m.

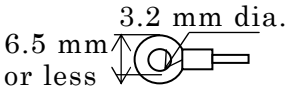

④ When the connection (wiring) is completed, check the following:
a. Are the wires connected properly?
b. Are there any remaining disconnected wires?
c. Are there any short-circuits or ground fault conditions occurring between terminals or wires?

⑤ After the connection is complete, fully insert the main unit to the socket until the hooks lock securely.

⚠ WARNING	● Be sure to ground the grounding wire. **Otherwise, an electric shock or fire may result.** ● The wiring must be done by an electric work specialist. ● Confirm that the power is turned off before start wiring work. **Otherwise, an electric shock may result.**

⑥ Current sensor

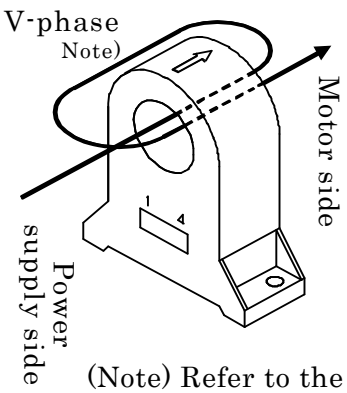

To detect motor current, pass the V-phase motor wire through the sensor in the direction from the power supply side to motor side as shown by the arrow. Make sure that the direction of the wire matches with the arrow on the top of the current sensor. The number of times to pass the wire through the sensor depends on the motor capacity and voltage. Refer to the following table for the specified number.
The figure on the left shows the case where the number of times to pass the wire through the sensor is two (2).

(Note) Refer to the connection diagrams on page 13 for the current sensor wiring and be sure to pass through the motor wire of the correct phase which is connected with the voltage input terminal V[2] of the TSM4000. If the wire of the other phase is connected, or the wire is passed through in the opposite direction, the electric power cannot be detected properly. This wiring is unrelated to the positive/reverse phase of the power supply or of the forward/reverse rotation switching of the motor.

■ Number of times to pass the wire through the sensor

Motor capacity (kW)	200/220 VAC motor			400/440 VAC motor		
	Motor rated current (A)	Sensor model No.	No. of times to pass wire through sensor	Motor rated current (A)	Sensor model No.	No. of times to pass wire through sensor
0.1	0.71	TSM-U010	6	0.36	TSM-U010	12
0.2	1.4	TSM-U010	3	0.70	TSM-U010	6
0.4	2.3	TSM-U010	2	1.2	TSM-U010	3
0.75	3.6	TSM-U050	6	1.8	TSM-U010	2
1.5	6.6	TSM-U050	3	3.3	TSM-U050	6
2.2	9.2	TSM-U050	2	4.6	TSM-U050	5
3.7	15	TSM-U050	1	7.5	TSM-U050	3
5.5	22	TSM-U050	1	11	TSM-U050	2
7.5	29	TSM-U100	1	15	TSM-U050	1
11	42	TSM-U100	1	21	TSM-U050	1
15	55	TSM-U150	1	28	TSM-U100	1
18.5	67	TSM-U150	1	34	TSM-U100	1
22	78	TSM-U200	1	39	TSM-U100	1
30	107	TSM-M300	1	54	TSM-U150	1
37	132	TSM-M300	1	66	TSM-U150	1
45	160	TSM-M400	1	80	TSM-U200	1
55	198	TSM-M600	1	99	TSM-M300	1
75	270	TSM-M600	1	135	TSM-M300	1
90	320	TSM-M800	1	160	TSM-M400	1
110	384	TSM-M800	1	192	TSM-M400	1
132				254	TSM-M600	1
150				289	TSM-M600	1
200				385	TSM-M800	1

The motor rated current values in the table are for reference only.

■ Connecting the sensor cable to the main unit

Connect the sensor cable TSM4-S01 included in the package properly to the current sensor and Shock Monitor main unit respectively. If the cable length is insufficient, longer cables are optionally available. Refer to page 4 for the model number of the sensor cable and contact TEM for ordering.

8. Terminal Functions

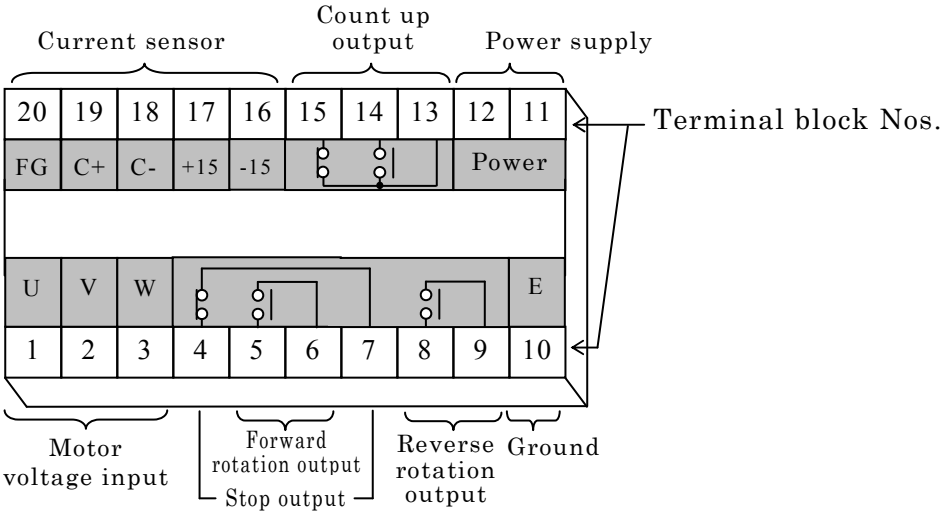

8.1 Terminal block

Terminal	Description
[Power supply/ground] 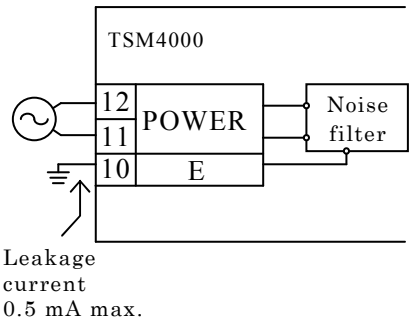 	● Power supply (Terminals 11 and 12) ・ Terminals used to connect the power supply for the Shock Monitor. Connect a commercial power supply of 90 to 250 VAC or a DC power supply of 90 to 250 VDC (no polarity). Never connect the output of an inverter or a servo driver (which may cause breakdown). ● E (Terminal 10) ・ A noise filter is connected. **This terminal must be grounded.** ・ Leakage current of 0.5 mA at maximum will flow the grounding wire from the power supply through the capacitor inside the noise filter.
[Sensor cable connection] 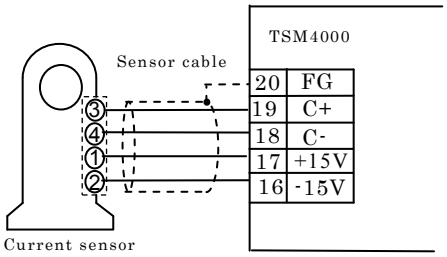 	・ Connector used to input the signals from the current sensor. ⚠ **CAUTION** **To prevent noises, route the sensor cable at least 15 cm away from an inverter, a servo driver unit, and their output lines.**
[Voltage input] 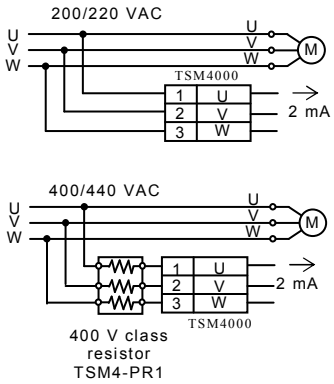 	●U, V, W (Terminals 1, 2, 3) ・Terminals used to input the voltage applied to the motor into the Shock Monitor. When a 400 V class motor is connected, be sure to connect the 400 V class resistor as shown on the left. Direct connection of a 400 V class motor may cause breakdown. A current of about 2 mA (AC) will flow through each terminal.

Terminal	Description
[Output relay] 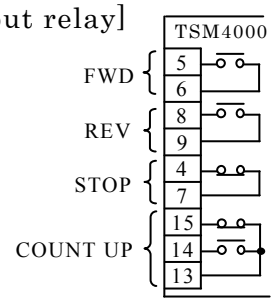 ① ② 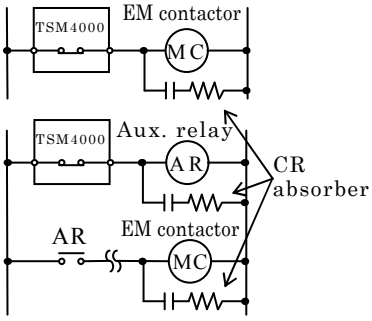 	● Forward rotation output: FWD (Terminals 5, 6) Command output to rotate the crusher in forward direction. ・This output turns ON/OFF the electromagnetic contactor or auxiliary relay used for forward rotation. ・Contact specifications: 1a contact: 250 VAC, 0.5A (Inductive load cosφ = 0.4) ● Reverse rotation output: REV (Terminals 8, 9) Command output to rotate the crusher in reverse direction. ・This output turns ON/OFF the electromagnetic contactor or auxiliary relay used for reverse rotation. ・Contact specifications: 1a contact: 250 VAC, 0.5A (Inductive load cosφ = 0.4) ● Stop output: STOP (Terminals 4, 7) Output to stop the operation signal for the crusher. The STOP output is activated for just one second in either of the following cases: (The b (normally closed) contact is open.) Operating condition 1: Stop for power saving When the idle operation with the power less than the no load level continues for the no load duration or longer. Operating condition 2: Stop when crushing is impossible When the switching between forward and reverse rotation is repeated for the number of times specified with 12: ｷﾞｬｸﾃﾝｶｲｽｳ. ・Contact specifications: 1b contact: 250 VAC, 0.5A (Inductive load cosφ = 0.4) ● Count up: COUNT UP (Terminals 13, 14, 15) Output to set a COUNT UP (Uncrushable) display. ・Like the Operating condition 2 for the STOP output above, this output is activated for just one second when the switching between forward and reverse rotation is repeated for the number of times specified with 12: ｷﾞｬｸﾃﾝｶｲｽｳ. (The a (normally open) contact is closed.) To set the display, refer to the connection diagram on page 12 and provide a Self-Hold circuit on the external device. ・Contact specifications: 1a contact: 250 VAC, 0.5A (Inductive load cosφ = 0.4) Notes: ・When an electromagnetic contactor is connected as shown in the left figure ①, limit the operating coil capacity to less than 100 VA at power-on and to less than 10 VA during retention. If an electromagnetic contactor with larger capacity is connected, activate an auxiliary relay with the output of the Shock Monitor as shown in the left figure ②, and then open/close the electromagnetic contactor with the contact of the auxiliary relay. ・As shown in the left figure, mount a CR absorber to the coils of the electromagnetic contactor and auxiliary relay to prevent noise generation. ・When a sequencer photocoupler input which operates with minute current (10 mA or less) is connected, activate a relay for minute current with a relay output, and then connect the contact of the relay for minute current to a sequencer photocoupler input.

8.2 Connector CN1

Terminal	Description
[Contact input] 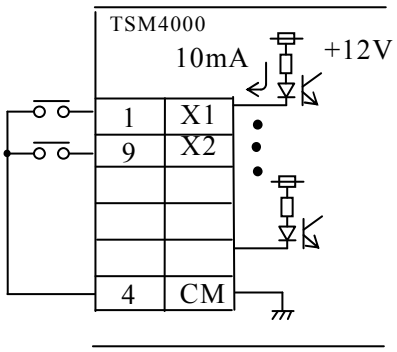 [Non-contact input] ① ○ 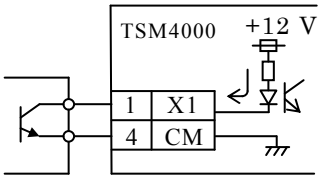 ② × 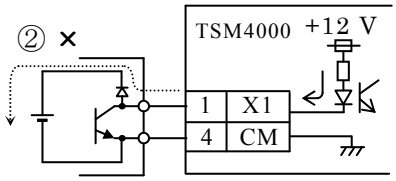 ③ × 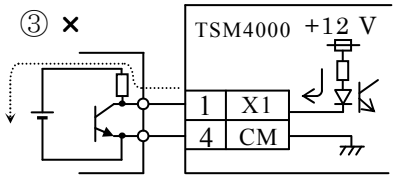 	● X1 (Terminal 1) Automatic operation input terminal When the section between X1 and CM is short-circuited, automatic operation starts. The operation stops when the section is opened. The rotation direction under normal load is forward (Output relay FWD is ON). In the automatic operation, measures against overload are taken automatically, such as stopping and switching to reverse rotation. ● X2 (Terminal 9) Manual reverse rotation command terminal When the section between X2 and CM is short-circuited, the reverse rotation operation is started manually. The operation stops when the section is opened. Unlike the automatic operation, the switching between forward and reverse rotation is not performed even when overload occurs. ● The operation stops when the sections between X1 and CM and X2 and CM are short-circuited simultaneously. Note: When setting [Non-contact input], be sure to use an open collector signal shown in the left figure ①. Using ② or ③ may cause malfunction due to a detour circuit which may be created depending on the condition of the power supply.

Terminal	Description
Analog output 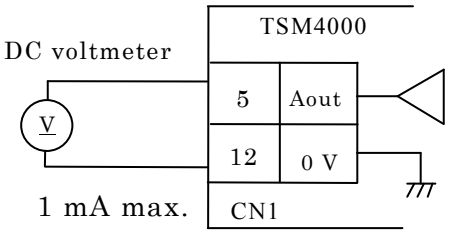 	・During the monitoring in the Monitor mode, the load ratio is output as DC voltage signals. The maximum output current is 1 mA. 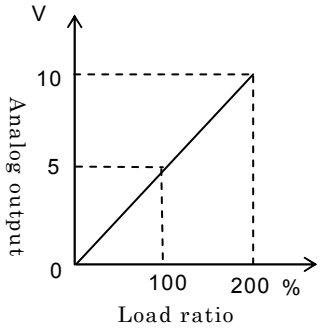

● Connector CN1 pin layout and I/O cable color

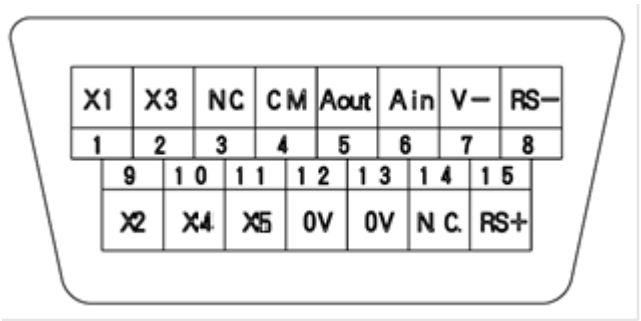

Color	Pin No.	Signal name
Black	1	X1
White	2	X3
	3	N.C.
Red	4	CM
Green	5	Aout
Yellow	6	Ain
Brown	7	V−
Blue	8	RS−
Purple	9	X2
Gray	10	X4
Pink	11	X5
Sky blue	12	0V
	13	0V
	14	N.C.
Orange	15	RS+

● LCD contrast adjustment

If the LCD display is difficult to read, adjust it with the ▲ or ▼ key while holding down the SET key.

(Note that setting the display too dark shortens the life of the LCD.)

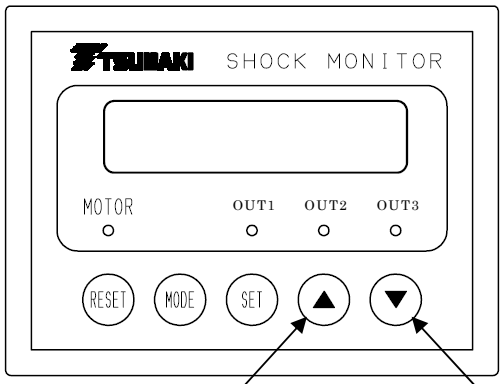

Hold down the SET key and press ▲ to make the display darker.

Hold down the SET key and press ▼ to make the display lighter.

9. Connection Diagram

■ Basic connection (Driven by commercial power supply)

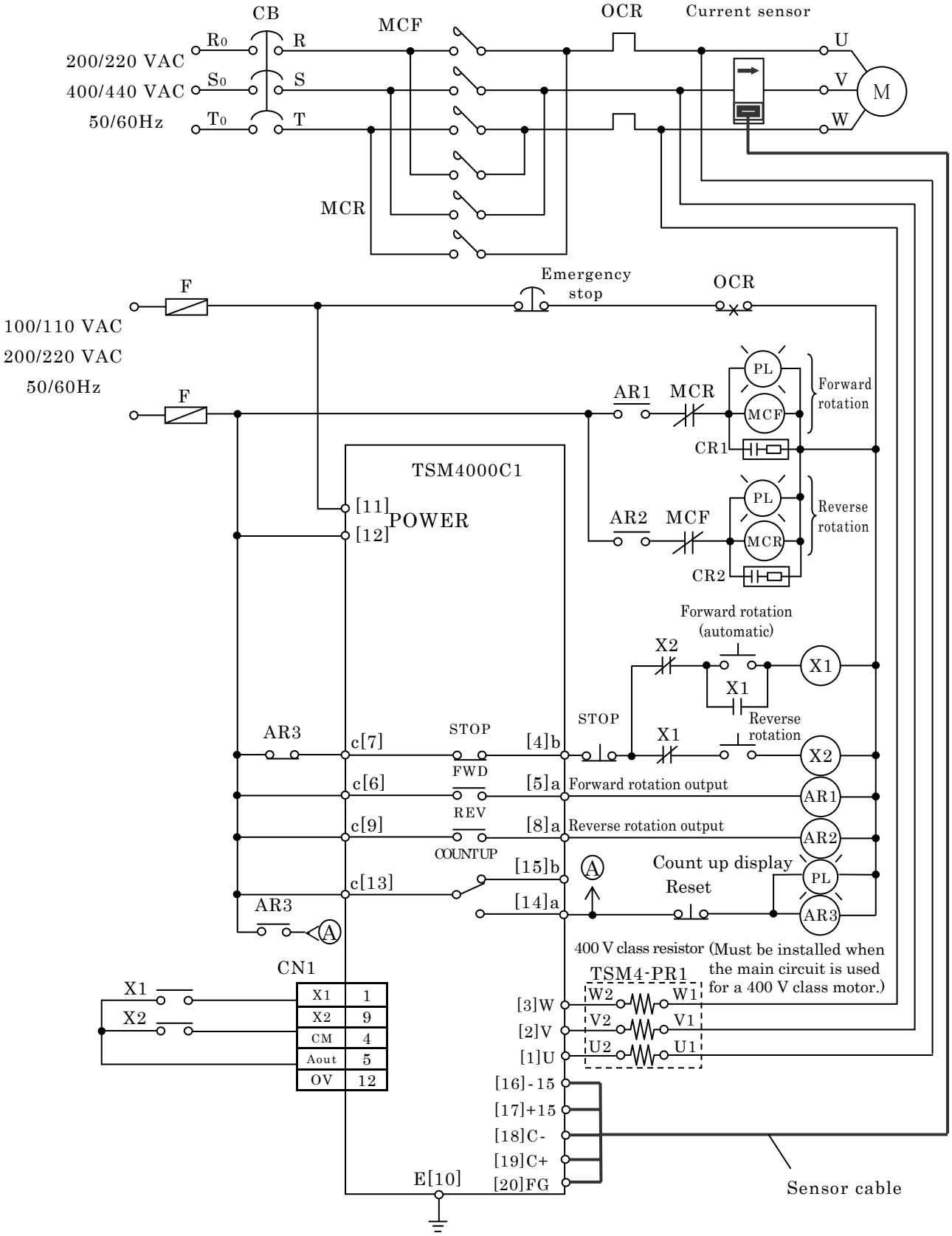

Notes:

(1) Use a current sensor which satisfies the requirement for motor capacity and voltage, and pass the motor wire through the sensor in the specified direction for the specified number of times.

(2) Set the current sensor on the phase connected to the voltage detection terminal [2] (V-phase) of the Shock Monitor.

(3) To monitor a 400V class motor, install the optional 400 V class resistor TSM4-PR2.

(4) Use relays for minute current for the contacts used for the input to [X1] and [X2].

10 Operation

The Shock Monitor TSM4000 provides Monitor mode, Test mode, and Program mode, which can be selected with the MODE key.

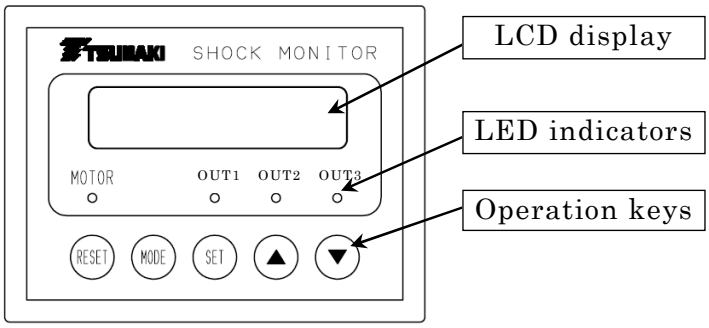

10.1 LED indicators and operation keys

		Monitor mode	Test mode (Display: OUTPUT CHECK)	Program mode
LED indicator	MOTOR	・Illuminates when the input power of the motor exceeds 5% or the current exceeds 10% (flashes within the Start Time).		
	OUT1	・Illuminates when the load is equivalent to or lower than the no load level.	・Illuminates while ▼ is pressed.	
	OUT2	・Illuminates when the load is equivalent to or higher than the overload level.	・Illuminates while ▲ is pressed.	
	OUT3	・Flashes when the count up output turns ON.	・Flashes when the count up output turns ON.	
Operation key	RESET	・Reset the LOW/C.UP display when the operation has been stopped due to no load or count up condition.	・Reset the LOW/C.UP display when the operation has been stopped due to no load or count up condition.	・Return to parameter 1.
	MODE	・Show the Test/Program mode switching screen.	・Change to the Monitor mode.	・Change to the Monitor mode.
	SET	・Change the monitor screen.	・Conduct the operation test of the relays. (Relay output, LED indicator) *1	・Save the parameter and move to the next parameter.
	▲	Hold down SET and press ▲ to make the LCD contrast darker.	・Test the automatic forward/reverse rotation switching against overload.	・Select data or increment a setting value.
	▼	Hold down SET and press ▼ to make the LCD contrast lighter.	・Test the function to stop operation when no load continues for a specified duration.	・Select data or decrement a setting value.

10.2 Switching modes

When the Shock Monitor is turned on, the initial screen is displayed for about three seconds, and then the device enters the Monitor mode.
The Monitor mode is used for load monitoring.

To change parameters, press the MODE key to go to the Program mode screen. Press the SET key to change to the Program mode.
On the MODE selection screen, press the MODE key again to go to the Test mode selection screen.
Press the SET key here to change to the Test mode.
In the Test mode, you can activate the output relay to issue outputs.
Press the MODE key to return to the Monitor mode.

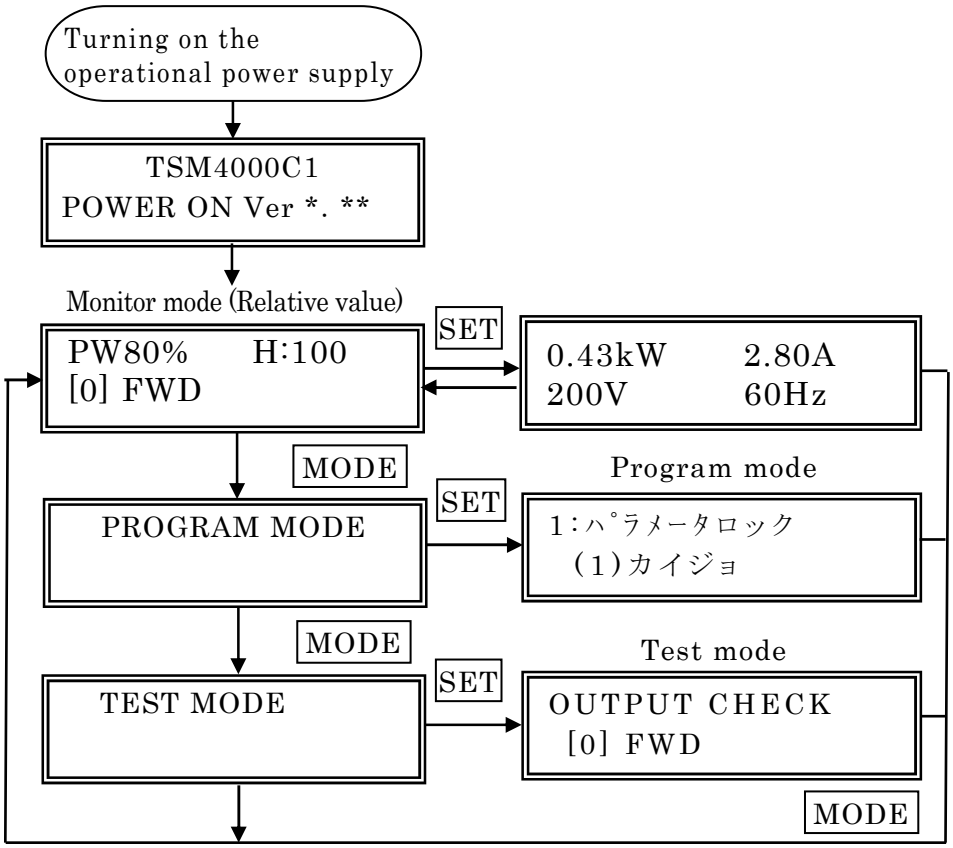

10.3 Monitor mode

The Monitor mode is used to actually monitor the load. The LCD display shows the current load ratio, current overload judgment criterion [No.], and the setting values for OUT1, OUT2 and OUT3. The display can be shown separately for relative and absolute values, which can be switched with the MODE key.
For power monitoring, the displayed load ratio is a value calculated on the assumption that the selected motor capacity is 100%. The relative value display shows the difference between reference value.

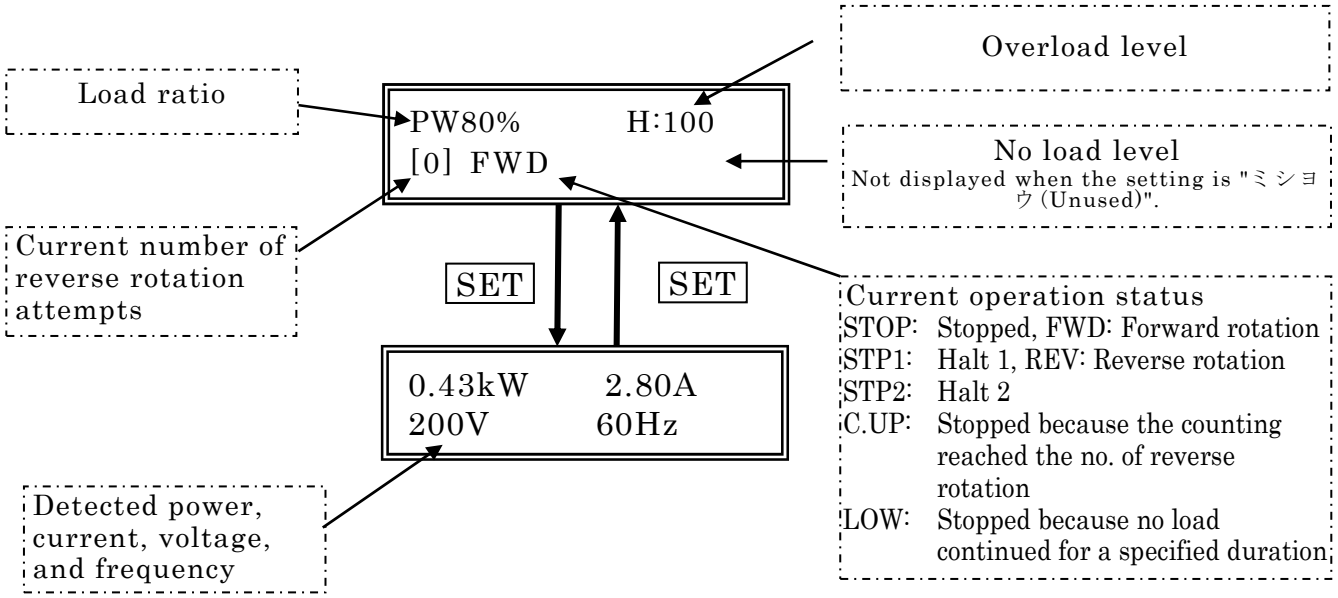

10.4 Test mode

When "OUTPUT CHECK" is displayed, you can check the operation of the forward/reverse rotation switching under overload condition by holding down the UP key. Or, you can check the function to stop operation when no load continues for a specified duration by holding down the DOWN key.

Both tests should be conducted while automatic operation signal X1 is turned ON. To interrupt the forward/reverse rotation switching operation, turn OFF X1.

Since the actual load is not monitored during the test mode, ensure that there is no possibility of material getting stuck or other problems. After the test is complete, press the TEST key again to return to the monitor mode (load monitoring mode).

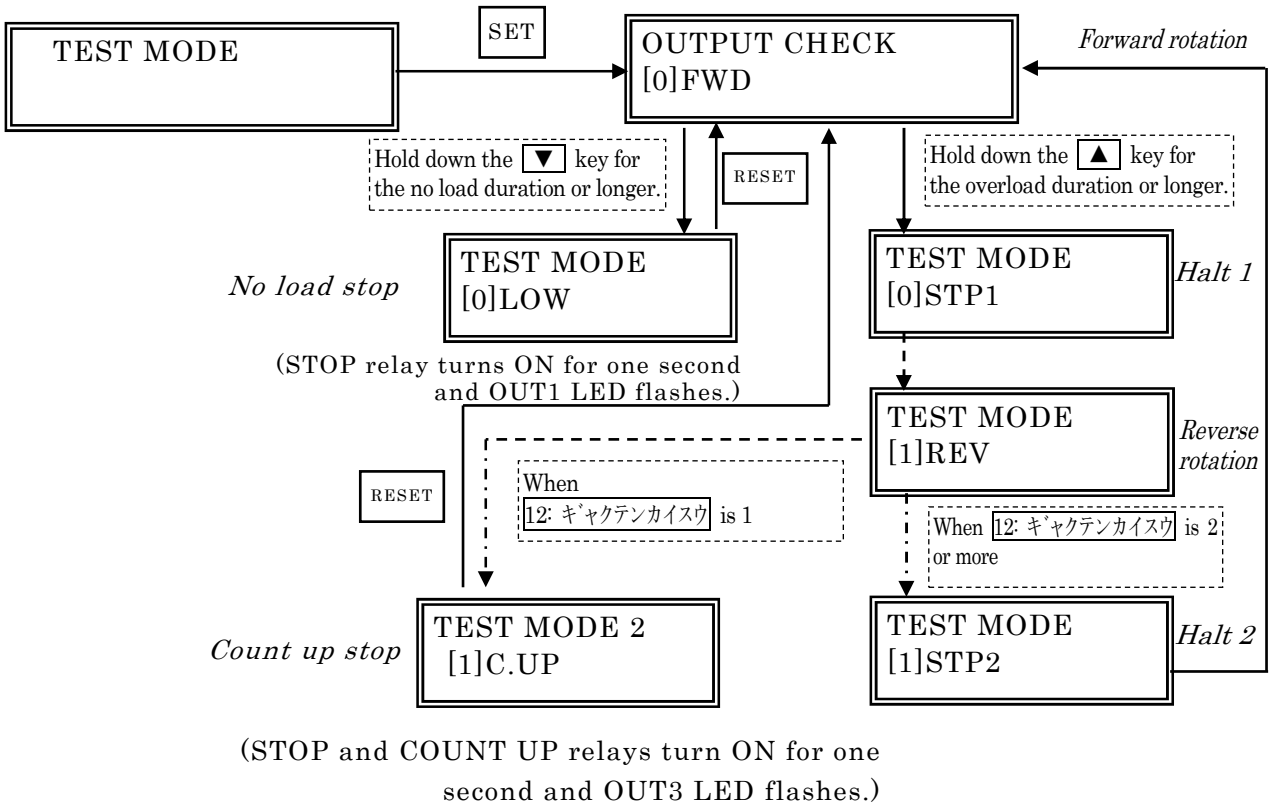

10.5 Program mode

The Program mode is used for changing and checking parameters.

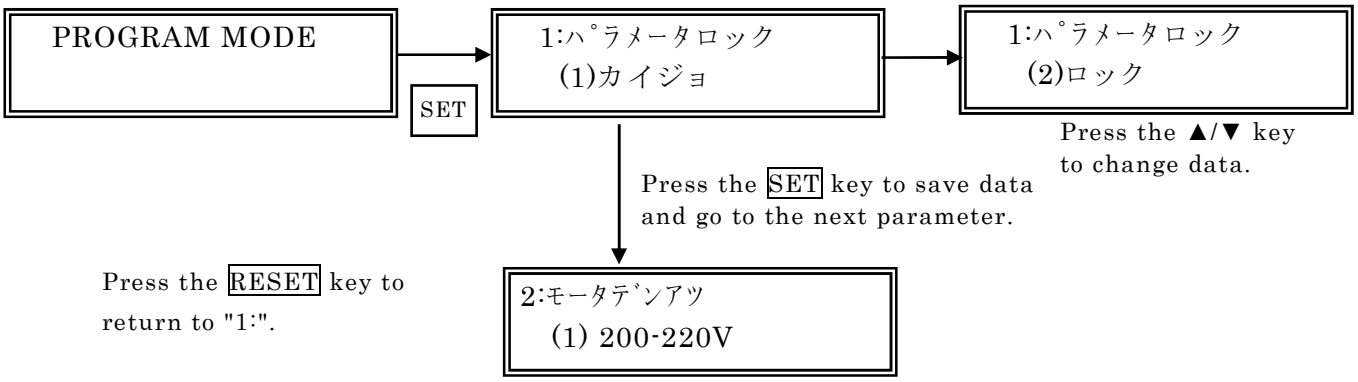

■ Parameter description and setting procedure

Parameter (Default data is shown.)	Data		Description
1:ﾊﾟﾗﾒｰﾀﾛｯｸ (1)ｶｲｼﾞｮ ▲ ▼ ...Select data. SET…Make the set data effective.	(1)Unlocked		・Parameters can be changed.
	(2)Locked		・All parameters other than 1:ﾊﾟﾗﾒｰﾀﾛｯｸ cannot be changed.
Motor voltage setting 2:ﾓｰﾀﾃﾞﾝｱﾂ (1)200-220V ▲ ▼ ...Select data. SET…Make the set data effective.	(1)200-220V		・Select (1) to monitor a 200 V class motor. The allowable maximum voltage is 250 VAC.
	(2)400/440V		・Select (2) to monitor a 400 V class motor. The allowable maximum voltage is 500 VAC. For a 400 V class motor, the optional 400 V class resistor TSM-PR2 must be installed.
Motor capacity setting 3:ﾓｰﾀﾖｳﾘｮｳ (4) 0.75kW ▲ ▼ ...Select data. SET…Make the set data effective.	(1)0.1kW	(13)22kW	Set the capacity of the motor to be monitored. If the setting for 2:ﾓｰﾀﾃﾞﾝｱﾂ is (1) 200/220V, the selection is possible within the range of (1) 0.1kW to (20) 110kW.
	(2)0.2kW	(14)30kW	
	(3)0.4kW	(15)37kW	
	(4)0.75kW	(16)45kW	
	(5)1.5kW	(17)55kW	
	(6)2.2kW	(18)75kW	
	(7)3.7kW	(19)90kW	
	(8)5.5kW	(20)110kW	
	(9)7.5kW	(21)132kW	
	(10)11kW	(22)150kW	
	(11)15kW	(23)200kW	
	(12)18.5kW		
No load level setting 4:ﾑﾌｶﾚﾍﾞﾙ Low ﾐｼｮｳ ▲ ▼ ...Select data. SET…Make the set data effective.	5 to 200%		・When the load ratio becomes equal to or less than the setting of 4:ﾑﾌｶﾚﾍﾞﾙ for the setting time of 7:ﾑﾌｶｹｲｿﾞｸﾀｲﾑ, the STOP relay turns ON for one second.
	ﾐｼｮｳ (Unused)		・The operation does not stop due to no load.
Overload level setting 5:ｶﾌｶﾚﾍﾞﾙ High 100% ▲ ▼ ...Select data. SET…Make the set data effective.	5 to 200%		・When the load ratio reaches or exceeds the setting of 5:ｶﾌｶﾚﾍﾞﾙ for the setting time of 8:ｶﾌｶｹｲｿﾞｸﾀｲﾑ, the reverse rotation operation starts automatically.

Parameter (Default data is shown.)	Data	Description
Start Time setting 6:スタートタイム 3.0s ▲ ▼ …Select data. SET…Make the set data effective.	1 to 300 s In increments of 1	・To prevent unnecessary operation during the startup period of the motor, the Shock Monitor disables the relay output function for a specified period after it is started, even in the Monitor mode. ・Set this parameter according to the motor startup time. ・The Start Time starts when the Shock Monitor returns from the Test mode or Program mode to the Monitor mode.
No load duration setting 7:ムフカケイソ゛クタイム 15.0min ▲…Increment the setting value. ▼…Decrement the setting value. SET…Make the set data effective.	0.1 to 60min	・When the load ratio becomes equal to or less than the setting of 4:ムフカレベ゛ル for the setting time of 7:ムフカケイソ゛クタイム, the STOP relay turns ON for one second. ・If the load ratio exceeds the no load level within the setting time, the time is reset.
Shock Time setting 8:カフカケイソ゛クタイム 1.0s ▲…Increment the setting value. ▼…Decrement the setting value. SET…Make the set data effective.	0.1 to 10.0 s In increments of 0.1	・When the load ratio reaches or exceeds the setting of 5:カフカレベ゛ル for the setting time of 8:カフカケイソ゛クタイム, the condition is determined as overload. ・If the load ratio drops below the overload level within the setting time, the time is reset.
	MIN (Shock Time: 0 s)	[Time required for detection and output] ・Motor power supply frequency: 50 Hz or more ··· Approx. 30 ms ・Motor power supply frequency: Less than 50 Hz ··· 1 cycle + Approx. 10 ms (Example: 20 Hz·····60 ms)
9:キュウシタイム(1) 10s ▲…Increment the setting value. ▼…Decrement the setting value. SET…Make the set data effective.	1 to 600 s In increments of 0.1 s	・For the automatic forward/reverse rotation switching operation against overload, set the period to halt the operation while the rotation is switched from forward to reverse direction. Provide enough halt time so that reverse rotation will not start until the motor stops completely.
10:ギ゛ャクテンタイム 5s ▲…Increment the setting value. ▼…Decrement the setting value. SET…Make the set data effective.	1 to 600 s In increments of 0.1 s	・For the automatic forward/reverse rotation switching operation against overload, set the period to continue reverse rotation. Provide enough reverse rotation time so that the problem such as material getting stuck can be cleared.

Parameter (Default data is shown.)	Data	Description
11:ｷｭｳｼﾀｲﾑ(2) 10s ▲…Increment the setting value. ▼…Decrement the setting value. SET…Make the set data effective.	1 to 600 s In increments of 1 s	・For the automatic forward/reverse rotation switching operation against overload, set the period to halt the operation while the rotation is switched from reverse to forward direction. Provide enough halt time so that forward rotation will not start until the motor stops completely.
No. of reverse rotation setting 12:ｷﾞｬｸﾃﾝｶｲｽｳ 5 ｶｲ ▲…Increment the setting value. ▼…Decrement the setting value. SET…Make the set data effective.	1 to 10 ｶｲ (times)	・Set the allowable number of reverse rotation attempts to determine the uncrushable status and stop the equipment when material gets stuck frequently within a specified period. When the reverse rotation due to overload is repeated for the number of times specified with this setting within 13:ｷﾞｬｸﾃﾝｶｳﾝﾄﾀｲﾑ, the crushing operation is considered to be impossible, and the COUNT UP output turns ON for just one second.
Reverse rotation count time setting 13:ｷﾞｬｸﾃﾝｶｳﾝﾄﾀｲﾑ 2min40s ﾌﾟﾗｽ 10s ↑ Reverse rotation count time: 2 minutes and 40 seconds ▲…Increment the setting value. ▼…Decrement the setting value.	Plus 1 to 600 s	Set the period to count the number of reverse rotation attempts. The reverse rotation count time refers to the period determined with the following expression: Reverse rotation count time = (6:スタートタイム + 9:キュウシタイム(1) + 10:ギャクテンタイム + 11:キュウシタイム(2) + Plus setting time for 13:ギャクテンカウントタイム) × (12:ギャクテンカイスウ − 1) The value for parameter 13:ｷﾞｬｸﾃﾝｶｳﾝﾄﾀｲﾑ is set as the period of one cycle time plus additional time. The reverse rotation count time is automatically calculated and displayed at the lower left of the LCD display.
Power detection response 14:ﾚｽﾎﾟﾝｽ (2)NORMAL ▲ ▼…Select data. SET…Make the set data effective.	(1)QUICK (2)NORMAL (3)SLOW	Set the response time for electric power detection. The moving average of the sampling values obtained at every 20 ms (*) is calculated and treated as effective data. There are three options to set the number of sampling values used for the average calculation. ・QUICK: Set this option when quick response is required. The data of one sampling value is regarded as effective data (20 ms). ・NORMAL: Use this setting for normal operation. The average of five sampling values is regarded as effective data (100 ms). ・SLOW: Set this option when you want to reduce display fluctuation. The average of 20 sampling values is regarded as effective data (400 ms).
LCD backlight setting 15:LCD ﾊﾞｯｸﾗｲﾄ (1)Always ▲ ▼…Select data. SET…Make the set data effective.	(1)Always	The backlight illuminates all the time.
	(2)2min	The backlight will turn off two minutes after the last key operation on the panel. After the backlight turns off, it illuminates again when any key is pressed.

11. Troubleshooting

Problem	Inspection item	Inspection result	Countermeasure
The LCD display shows nothing.	Wiring of the operational power supply (Between terminals 11 and 12)	No wiring installed.	Install the wiring properly.
	Operational power supply voltage (Between terminals 11 and 12)	Less than 90 VAC	Provide voltage of 90 to 250 VAC.
		90 to 250 VAC	Replace or repair Shock Monitor.
The LCD display is illegible.	Adjust the contrast (Refer to page 9.).	The display becomes dark.	Re-adjust the contrast.
		The display does not improve.	Replace or repair Shock Monitor.
Output is activated immediately after Shock Monitor starts.	In the Program mode, check the setting value of 6:スタートタイム.	Short	Set a little longer value.
		Long (It is clear that the output is activated within the setting value.)	Replace or repair Shock Monitor.
Even when a long value is set to 6:スタートタイム, the relay is activated as soon as the time is up.	Startup time of the motor Acceleration time of the inverter	Longer than 20 seconds	Review the motor capacity.
			Set a shorter acceleration time.
	In the Monitor mode, check the load ratio and setting level at startup.	The setting value is small.	Set a larger value in the Program mode.
		Wrong detection level is selected.	Check the process switching input.
The load ratio is shown as 0%.	Is the current sensor and main unit connected?	The sensor cable is disconnected.	Connect the cable properly.
	Does the V-phase motor wire pass through the current sensor?	・No wire passes through the sensor. ・Other phase	Install the wiring properly.
	Check the wiring of the voltage input U, V, W (Terminals 1, 2, 3).	・No wiring installed or wiring is disconnected. ・Incorrect wiring	Install the wiring properly.
Although the motor starts, the displayed load ratio is wrong with respect to the actual load.	Model number of the current sensor	Wrong	Replace with a correct sensor.
	Does the V-phase motor wire pass through the current sensor?	Other phase (U-phase or W-phase)	Install the wiring properly.
	Is the No. of times to pass the wire through the sensor correct?	Wrong	
	Check the wiring of the voltage input U, V, W (Terminals 1, 2, 3).	・No wiring installed or wiring is disconnected. ・Incorrect wiring	Install the wiring properly.
	In the Monitor mode, check that the correct motor has been selected.	The selection does not correspond with the actual motor.	Set the parameters (2 and 3) properly.
	Start the motor, change the display screen, and check the voltage and current values.	The load ratio far deviate from the displayed current value.	Repair Shock Monitor. Replace Shock Monitor.
The displayed load ratio is negative.	Is the motor operation status negative torque?	Rapid deceleration is caused by inverter operation.	If the actual torque is negative, the display is not abnormal.
		The operation is affected by load.	If the actual torque is negative, the display is not abnormal.
	Check the wiring of the voltage input U, V, W (Terminals 1, 2, 3).	・No wiring installed or wiring is disconnected. ・Incorrect wiring	Install the wiring properly.
	Does the motor wire pass through the current sensor in the right direction? (Does the direction match with the arrow on the top of the current sensor?)	Opposite direction	Install the wiring properly.
		The load torque is positive and the motor wire correctly passes through the current sensor.	・Replace Shock Monitor. ・Repair Shock Monitor.
Although the load ratio display is correct, the relay output is not activated.	In the Monitor mode, check the level setting values.	The level setting values are not set properly.	Set appropriate values.
	In the Program mode, check the Overload Duration.	Too long.	Set a shorter value.

12. Trip Reset Procedure

(1) Inspect the equipment for any abnormalities.
(2) If an abnormality is found, eliminate the cause and reset the equipment to normal status.
(3) If the relay output is in self-holding status, press the RESET key to reset it. The reset is also possible by turning off the operational power supply for the Shock Monitor for a short time.
(4) After confirming steps (1), (2), and (3), restart the equipment.

13. Precautions on Maintenance/Inspection

Be sure to observe the following during the maintenance/inspection work.

(1) To prevent secondary damage, clean up the surrounding area and ensure safety during the work.
⚠ (2) Before inspecting the installation or connection of the Shock Monitor, be sure to turn off the power to make the machine completely stop and the LCD display of the Shock Monitor completely turn off. Ensure that the Shock Monitor will not be turned on accidentally.
(3) Observe the guidelines listed in the Labor Safety and Health Regulation.
⚠ (4) When conducting a megger test or dielectric withstanding voltage test, remove the Shock Monitor main unit from the socket to avoid test voltage.

14. Periodic Inspection

(1) Inspect that the "MOTOR RUN" LED indicator of the Shock Monitor illuminates while the motor is running, and the load ratio value on the LCD display is normal. (Daily inspection)
(2) In the Test mode, inspect the operation of the relay outputs OUT1, OUT2, and OUT3 on a regular basis.
(3) Inspect for looseness in the installation of the Shock Monitor main unit and current sensor on a regular basis.
(4) Inspect for looseness in the terminal connection of the Shock Monitor main unit and sensor cable connection on a regular basis.
(5) Although the life of the Shock Monitor varies depending on the installation environment and operating time, the life of the electrolytic capacitor is normally about 10 years under continuous energization at annual average ambient temperature of 30°C. It is recommended to overhaul the Shock Monitor or replace it with a new one before any problem occurs.
(6) The brightness of the LCD display varies depending on the ambient temperature and operating time. If the display becomes illegible, adjust the contrast.

Perform the periodic inspection during trial operation, and when the equipment was moved, and when the wiring was changed.

15. For Your Safety

(1) If any danger is expected as a result of the operation of Shock Monitor, be sure to take measures to avoid such danger.
(2) Also, give due consideration on the equipment side so that, even if Shock Monitor does not operate normally, no dangerous situation would develop.

16. Specifications

Model number			TSM4000C1	TSM4000C1P
Applicable motor		Capacity	0.1 to 110 kW(200/220V) 0.1 to 200 kW(400/440V)	
		Voltage	3-phase, 200/220 VAC or 400/440 VAC	
		Power supply frequency	5 to 120 Hz	
Operational power supply voltage			Commercial power supply 90 to 250 VAC 50/60 Hz, 90 to 250 VDC No polarity	
Input	Terminals 17, 18, 19		250 VAC max. *1	
	Current sensor		2.5 VDC	
	Control input		X1 (Automatic operation), X2 (Manual reverse rotation operation)	
Setting	Power setting range	Overload	5 to 200%	
		No load	ﾐｼｮｳ (Unused), 5 to 200%	
	Start Time setting range		1 to 300 s	
	Shock Time setting range		MIN or 0.1 to 10.0 s When the motor power supply frequency is 50 Hz or more, the Shock Time for "MIN" is approximately 50 ms. *2	
	Halt time after overload occurs		1 to 600 s	
	Reverse rotation operation time		1 to 600 s	
	Halt time after reverse rotation operation finishes		1 to 600 s	
	Allowable no. of times of reverse rotation		1 to 10 times	
	Reverse rotation count time		Time for 1 cycle + 0 to 600 s	
	No load duration		0.1 to 60 min	
	Response		QUICK, NORMAL, SLOW	
Display	Power percentage display range		0 to +200%	
	Voltage display range		0 to 500 V (Resolution: 1% of motor rated voltage)	
	Current display range		0.01 to 2,000 A (Resolution: 1% of motor rated current)	
	Frequency display range		5 to 120 Hz	
Output	Relay output		FWD (forward rotation), STOP, REV (reverse rotation) COUNT UP (no more forward/reverse rotation repetitions) ・Contact specifications: 250 VAC, 0.5A (Inductive load cosφ = 0.4) 30 VDC, 0.4 A (Inductive load),110 VDC, 0.2A (Inductive load)	
			24 VDC, 4 mA	
			100,000 times of operation	
	Analog output signal		0 to 10 VDC	
Other	Test function		Operation check of each relay in test mode	
Power consumption			10 VA (Inrush current 5A within 5 ms)	
Approximate weight			1.0 kg	
Operating environment		Ambient temperature	0 to +50℃	
		Relative humidity	45 to 85% RH, no condensation	
		Altitude	1,000 m max.	
		Atmosphere	No oil mist, corrosive gases, and dust	
Mounting			DIN rail, screw mounting	Panel mounting

Note) *1. To use a 400/440 VAC motor, the optional 400 V class resistor "TSM4-PR1" is required.

*2. When the motor power supply frequency is less than 50 Hz, the Shock Time for "MIN" is 2 cycles of the power supply frequency + Approx. 10 ms. (Example for the case of 25 Hz: 80 + 10 = 90 ms)

17. Outer Dimensions

■Main unit TSM4000C1

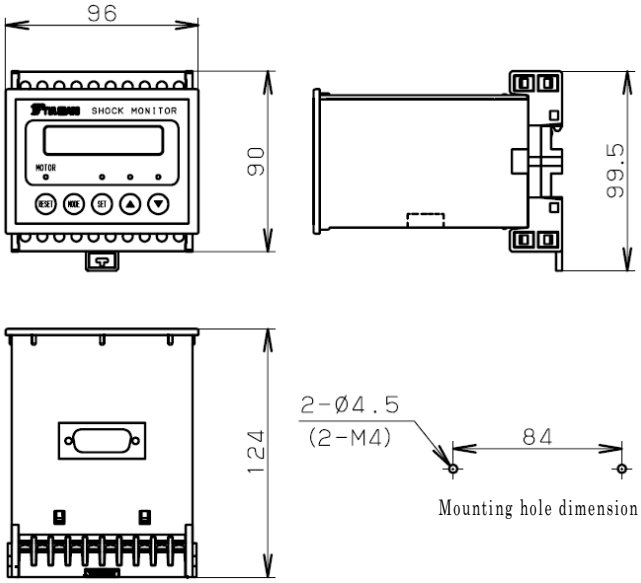

TSM4000C1P

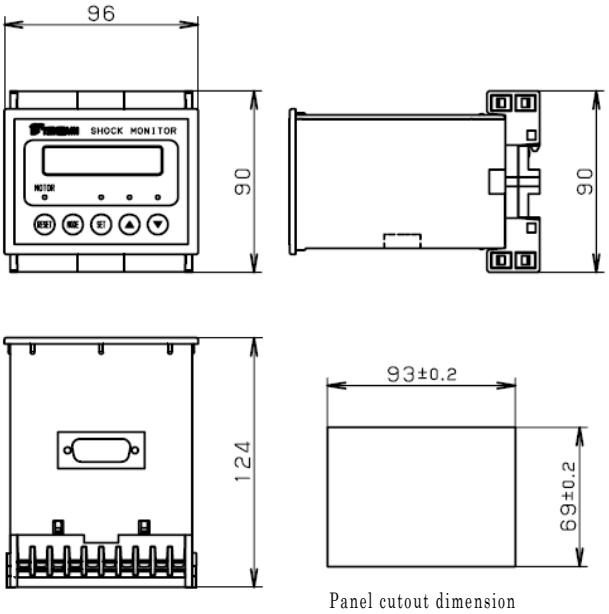

■Current sensor

TSM-U010, TSM-U050, TSM-U100
TSM-U150, TSM-U200

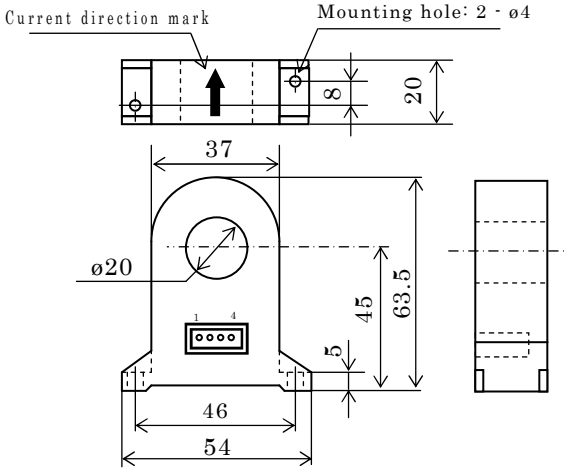

TSM-M300, TSM-M400, TSM-M600
TSM-M800

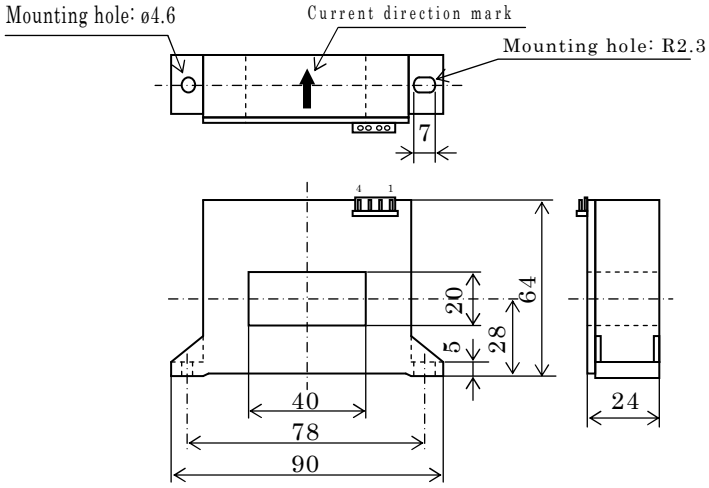

■400 V class resistor
TSM4-PR1

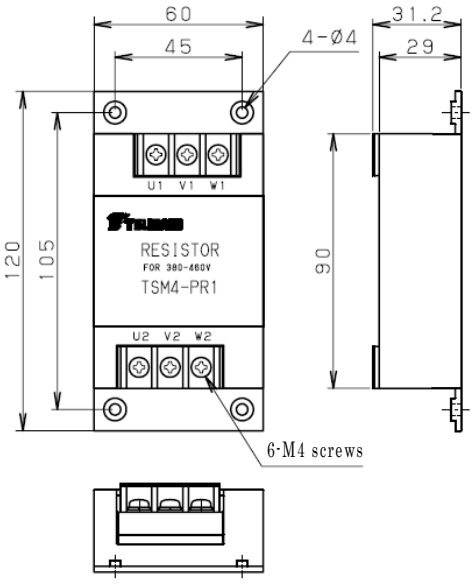

■ Panel mounting bracket (for TSM4000C1P)
TSM4-PL1

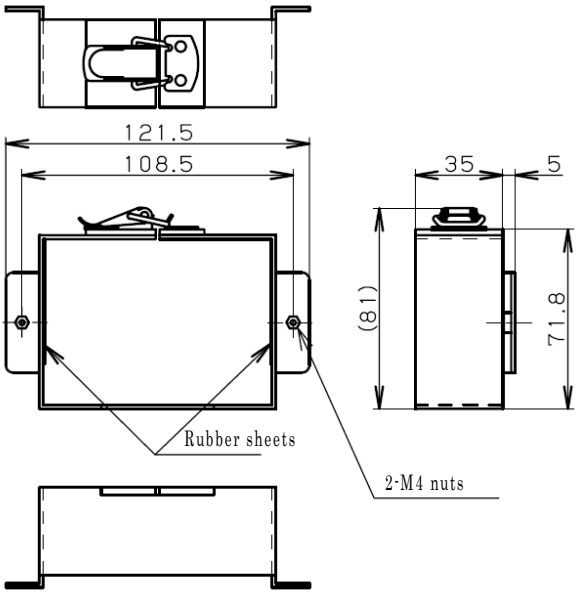

■Sensor cable
TSM4-S01, TSM4-S03, TSM4-S05
TSM4-S10, TSM4-S20, TSM4-S30

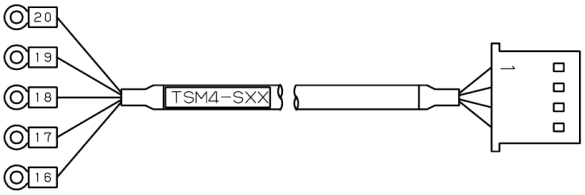

■I/O cable
TSM4-C01
TSM4-C03

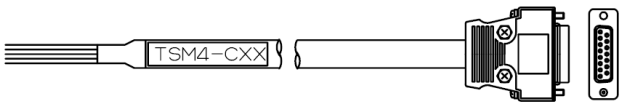

18. Warranty

18.1 Free warranty period

TEM shall offer free warranty period of 18 months after the shipment from the factory or 12 months after the beginning of the use (counted from the completion of the installation of the TEM product into your equipment), whichever is shorter.

18.2 Warranty coverage

Any failure or malfunction occurred in the TEM product within the free warranty period shall be repaired or be handled by replacing the failed part with no charge through the return of the product to TEM, as long as the proper installation, usage, and maintenance in accordance with the instruction manual are provided by the customer.
Note, however, that this free warranty shall cover only the TEM product delivered to the customer and the following expenses shall not be covered by the warranty.

(1) The cost for the removal or installation of the TEM product from or to the customer's equipment for the purpose of replacement or repair, and the cost associated with such work.
(2) The transportation cost for sending the customer's equipment to the customer's repair plant or other place.
(3) The lost earnings of the customer resulted from the failure and/or repair, as well as other increased damages.

18.3 Paid warranty

Even within the free warranty period, if a failure or malfunction occurs in the TEM product due to any of the following causes, the investigation/repair shall be charged.

(1) The customer did not install the TEM product properly in accordance with the instruction manual.
(2) The customer did not handle the product properly and/or did not provide sufficient maintenance.
(3) The failure or malfunction was resulted from improper connection between the TEM product and other equipment.
(4) The customer changed the structure of the TEM product such as modification.
(5) The TEM product was not repaired at TEM or TEM-designated plants.
(6) The TEM product was not used in the appropriate operating environment described in the instruction manual.
(7) The failure or malfunction was caused by force majeure such as disasters or by illegal behavior of a third party.
(8) The failure of the TEM product was caused incidentally by the malfunction of the customer's equipment.
(9) The failure was caused by the installed customer-supplied part or by the part used in accordance with the designation of the customer.
(10) The failure was caused by failed wiring or incorrect parameter setting conducted by the customer.
(11) The product has reached its life which is normal for the operating condition.
(12) Damage occurred due to the cause for which TEM was not liable.

MEMO

MEMO

TSUBAKIMOTO CHAIN CO.

1-1, Kohtari-Kuresumi, Nagaokakyo
Kyoto 617- 0833, Japan
Internet : http://tsubakimoto.com/

U.S. Tsubaki Power Transmission, LLC
http://www.ustsubaki.com/

Tsubaki of Canada Limited
http://tsubaki.ca/

Tsubaki Australia Pty. Limited
http://tsubaki.com.au/

Tsubakimoto Singapore Pte. Ltd.
http://tsubaki.sg/

Taiwan Tsubakimoto Co.
http://tsubakimoto.com.tw/

Tsubakimoto Chain (Shanghai) Co., Ltd.
http://tsubaki.cn/

Tsubakimoto Europe B.V.
http://tsubaki.eu/

Tsubakimoto U.K. Ltd.
http://tsubaki.eu/

Tsubakimoto Korea Co., Ltd.
http://tsubakimoto-tck.co.kr/